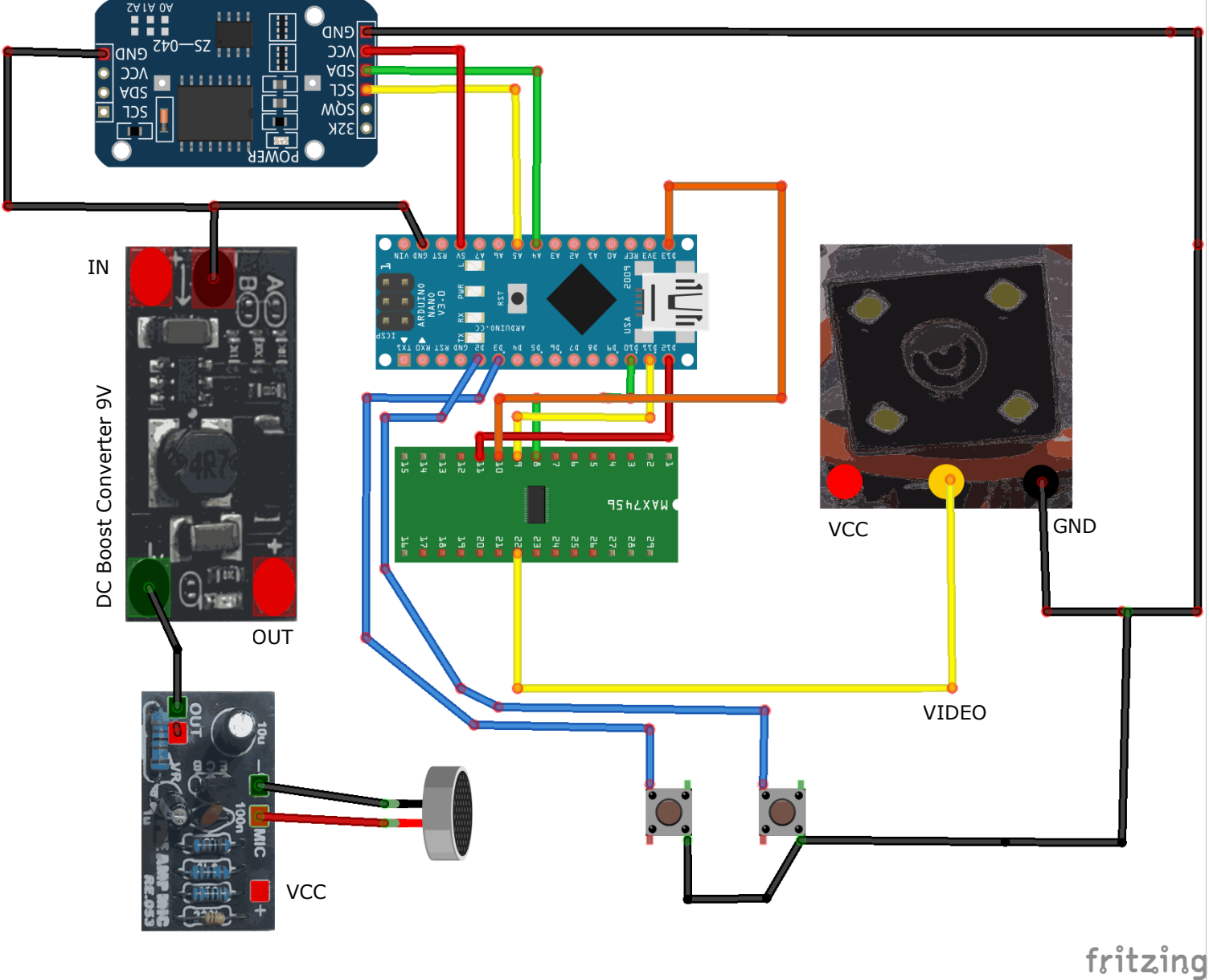
IN
DC Boost Converter 9V
OUT
VCC
GND
VIDEO
VCC
fritzing