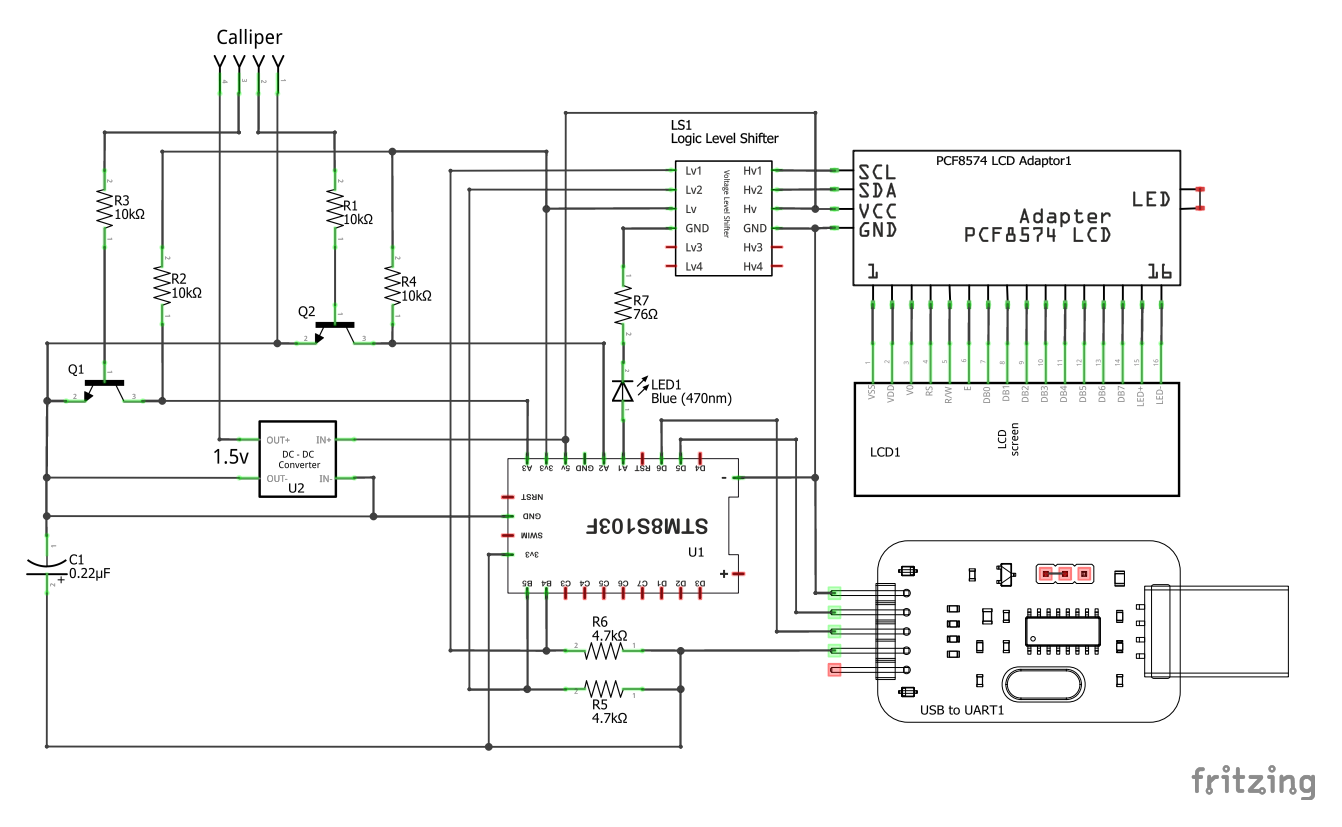
Calliper
R3
10kΩ
R1
10kΩ
R2
10kΩ
R4
10kΩ
Q2
Q1
1.5v
OUT+
IN+
DC - DC
Converter
OUT-
IN-
U2
C1
0.22µF
LS1
Logic Level Shifter
Lv1
Lv2
Lv
GND
Lv3
Lv4
Hv1
Hv2
Hv
GND
Hv3
Hv4
Voltage Level Shifter
R7
76Ω
LED1
Blue (470nm)
STM8S103F
U1
R6
4.7kΩ
R5
4.7kΩ
PCF8574 LCD Adaptor1
SCL
SDA
VCC
GND
LED
Adapter
PCF8574 LCD
1
16
VSS
VDD
VO
RS
R/W
E
DB0
DB1
DB2
DB3
DB4
DB5
DB6
DB7
LED+
LED-
LCD1
LCD
screen
USB to UART1
fritzing