Flying plane may cause eye injury; throw with caution

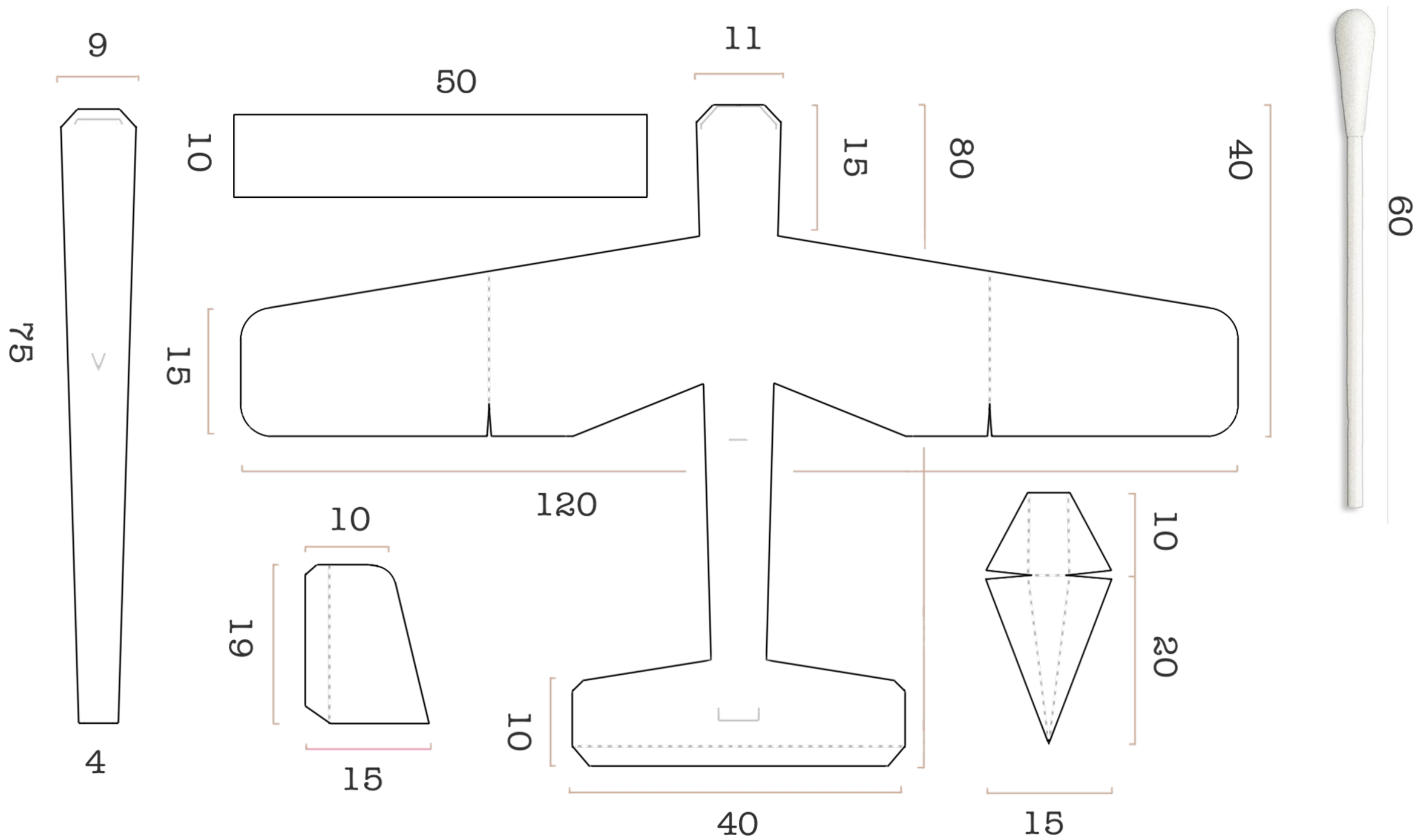

COTTON SWAB GLIDER

in millimeters

0 0.5 1
inches

0 1 2
centimeters

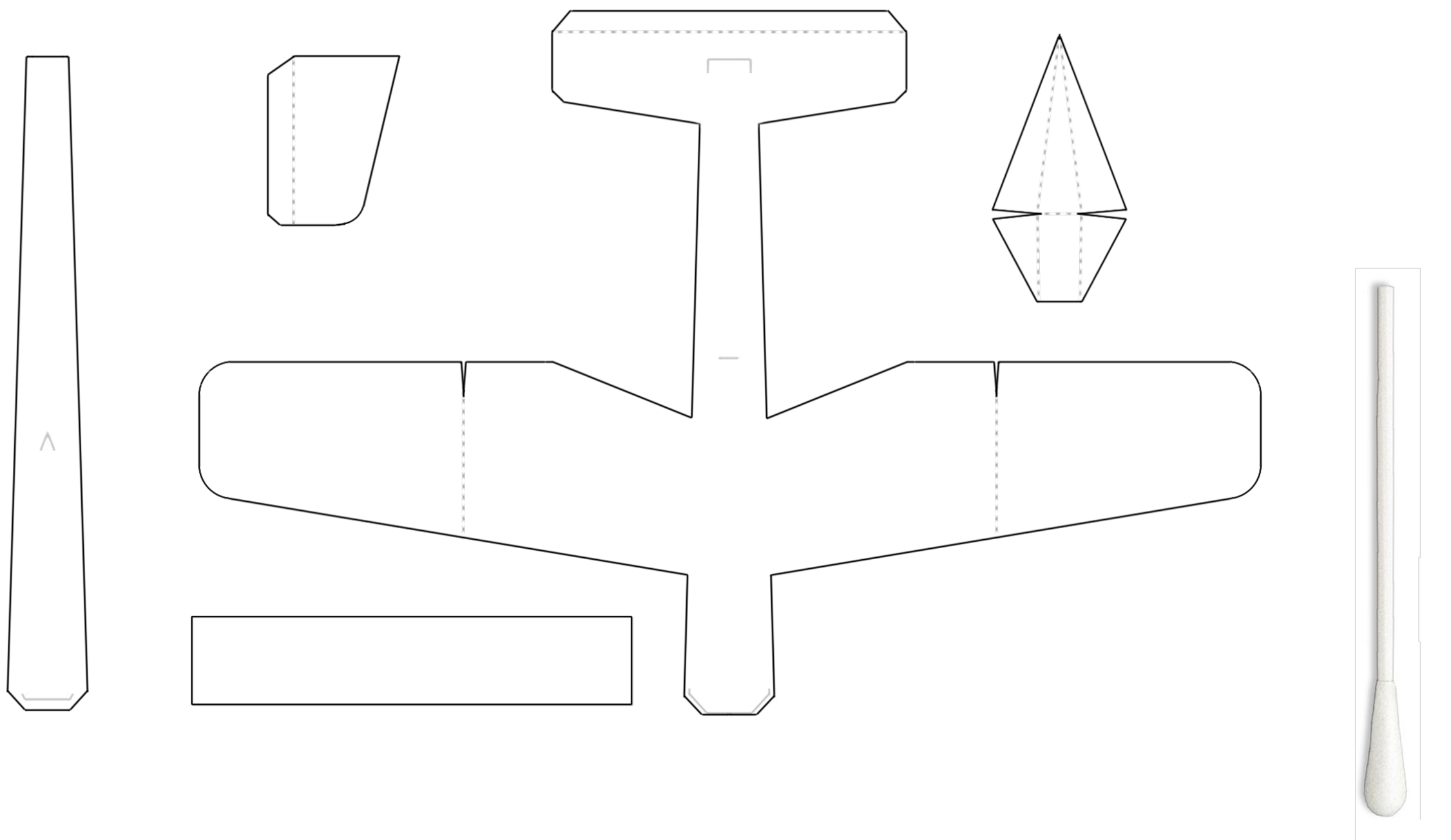

© ZDE 2021